KRATOS



Kratos 67K-311

27" One-Door Worktop Freezer

Parts Manual

67K-311

NO.	Part Description	Part No.	Alt Part No.	QTY
3	DOOR,KRATOS 67K-304,67K-311	209971	67K-P218	1
4	GASKET,KRATOS 67K-300,-304,-307,-311	188518	67K-P211	1
5	DOOR BUSHING,FOR KRATOS SW PREP TABLES	145059	67K-P25	1
6	DOOR SWING CARTRIDGE,KRATOS REFRIG UNITS	120509	67K-P20	1
7	BTTM RT HINGE,FOR KRATOS SW PREP TABLES	218097	67K-P27	1
8	UP RIGHT HINGE, KRATOS SW PREP TABLES	52803	67K-P56	1
12	CASTER,4",W/BRAKE,KRATOS REFRIG UNITS	202349	67K-P02	2
13	CASTER,4",FOR KRATOS REFRIG UNITS	186249	67K-P01	2
16	TSTAT, KRATOS FREEZER UNITS	156237	67K-P130	1
19	IN DRAIN PAN,KRATOS 67K-300,304,307,311	134896	67K-P236	1
23	CONDENSER,KRATOS 67K-304,67K-311	201883	67K-P219	1
24	FAN MTR, CNDNSR,67K-001,-007,SWPREP TBLS	176336	67K-P100	1
25	CNDNSR BLADE,KRATOS, 1DR SWPREP TABLES	175959	67K-P141	1
28	DRYER FILTER, KRATOS REFRIGERATION UNITS	196331	67K-P102	1
30	COMPRESSOR,KRATOS,67K-030,67K-031	116235	67K-P137	1
36	PILASTER,3 HOLES,KRATOS UNDRCNTR & WRKTP	195839	67K-P213	2
37	PILASTER,2 HOLES,KRATOS UNDRCNTR & WRKTP	212234	67K-P214	2
38	SHELF CLIP,KRATOS SW PREP TABLES	20045	67K-P37	4
39	SHELF,KRATOS 67K-300,-301,-304,-307,-311	190432	67K-P215	1
42	EVAP FAN MTR,KRATOS UNDRCNTR & WRKTP	114897	67K-P222	1
44	DRAIN HOSE,KRATOS SWPREP TABLES	212351	67K-P146	1
45	POWER CORD,1DR FRIG UNITS,SWPREP TABLES	165804	67K-P122	1
46	INT TEMP SENSOR,KRATOS, SWPREP TABLES	190499	67K-P156	1
47	THERMOMETER, KRATOS SW PREP TABLES	134185	67K-P54	1
50	TEMP SNSR,INT,KRATOS UNDRCTR &WRKTP FRZR	166269	67K-P224	1
53	POWER SUPPLY,KRATOS UNDRCNTR & WRKTP	31452	67K-P217	1
54	RELAY,KRATOS UNDERCOUNTER & WORKTOP FRZR	24270	67K-P225	1

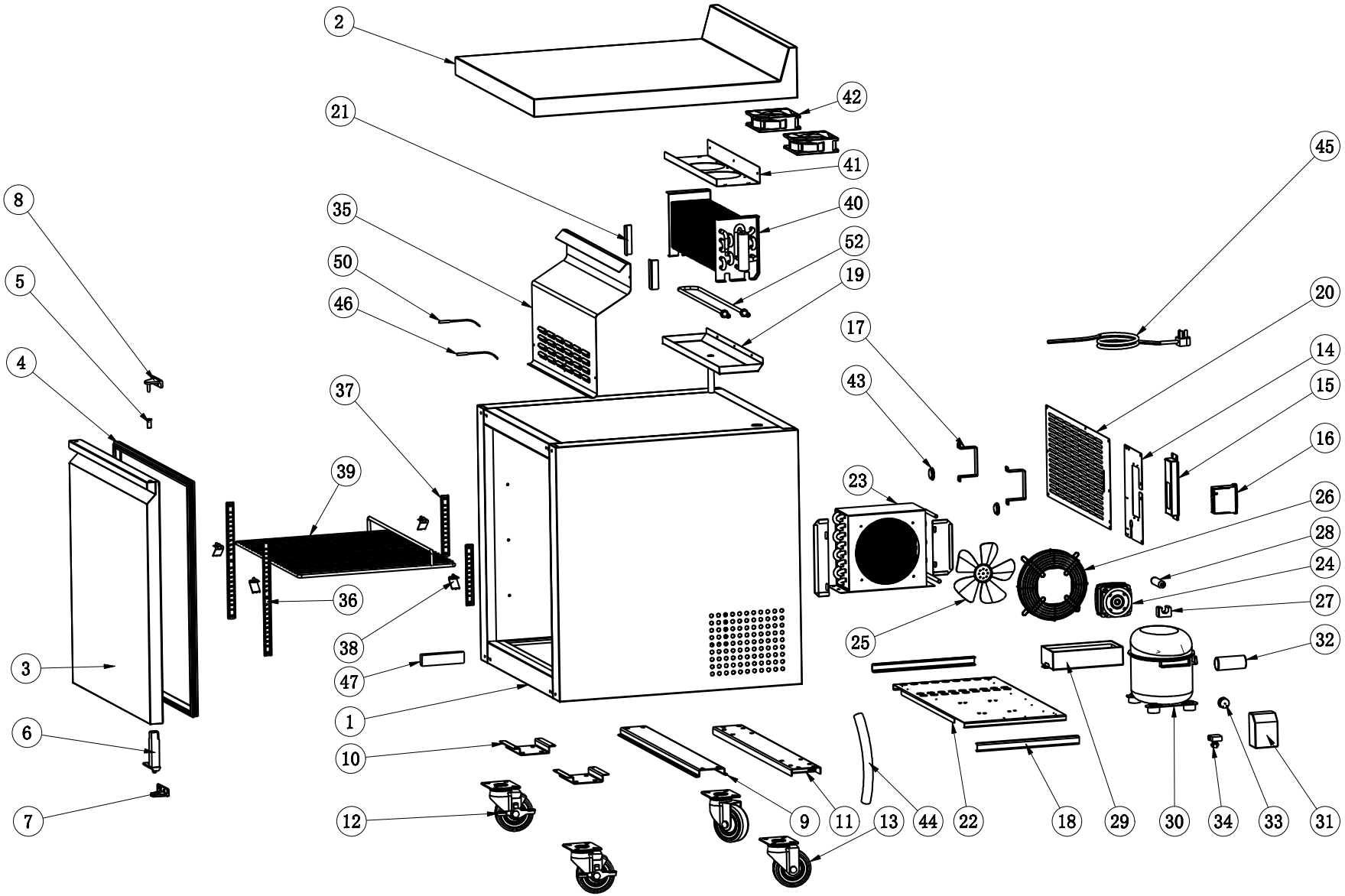
2
21
42
41
40
52
19
35
50
46
8
5
4
37
39
36
38
47
1
3
6
7
10
12
9
11
13
44
22
18
29
30
34
33
31
45
20
14
15
16
17
43
23
26
28
24
27
25
32